Reg. No. | | | | | | | | | | | **[22ESCE12]**

FIRST SEMESTER B.Tech EXAMINATION, FEBRUARY- 2023

ENGINEERING MECHANICS

Time: 3 Hours **Maximum Marks: 100**

Instructions: **i.** Missing data may be suitably assumed.

ii. Answer All Questions

PART - A

5 X 2=10

1.	**a.**	List the various types of loads.	L-1	CO1	**02**
	b.	Define friction.	L-1	CO2	**02**
	c.	What is centroid?	L-1	CO3	**02**
	d.	State perpendicular axis theorem.	L-1	CO4	**02**
	e.	Define acceleration.	L-1	CO5	**02**
		PART - B			**6X5=30**
2.	**a.**	With the help of sketches explain five types of force system.	L-3	CO1	**05**
		OR			
	b.	Explain the following with neat sketch **i.** Principle of superposition of forces **ii.** Principle of transmissibility of forces	L-3	CO1	**05**
3.	a.	Explain i. Angle of repose ii. Angle of friction	L-3	CO2	**05**
		OR			
	b.	What is plane frame and space frame?	L-3	CO2	**05**
4.	**a.**	Determine the centroid of bar bent in to a shape as shown in figure. 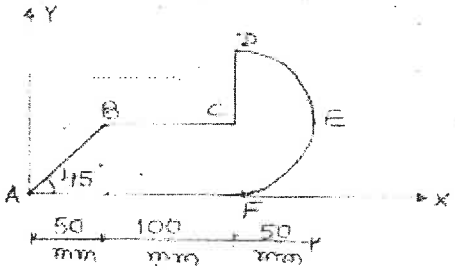 	L-4	CO3	**05**
		OR			
	b.	Determine the centroid of an equilateral triangle area.	L-4	CO3	**05**
5.	**a.**	State and prove parallel axis theorem	L-4	CO4	**05**
		OR			
	b.	Find the moment of inertia for the following L-section. The units are millimetres.	L-4	CO4	**05**

		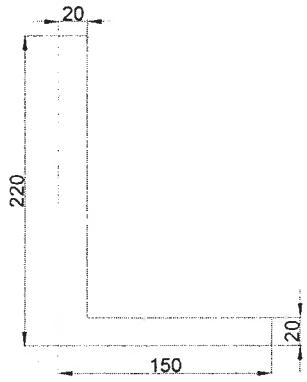			
6.	**a.**	Explain uniform velocity and speed.	L-4	CO5	**05**
		OR			
	b.	Explain displacement-time graphs.	L-4	CO5	**05**
7.	**a.**	A particle moves along a straight line such that its position is defined by $s = (t^3 - 3t^2 + 2)$ m. Determine the velocity and acceleration of the particle when t = 4s	L-4	CO5	**05**
		OR			
	b.	Prove that centroid of rectangle is at the centre.	L-3	CO3	**05**
		PART - C			**6X10=60**
8.	**a.**	List and explain any two types of beams and supports with neat sketches.	L-3	CO1	**10**
		OR			
	b.	Find the magnitude of force P required to keep the 100Kg mass in the position by strings as shown in the figure. 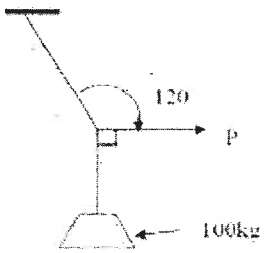	L-4	CO1	**10**
9.	**a.**	Write short note on the following i. Limiting friction ii. Angle of friction iii. Coefficient of friction iv. Angle of repose	L-3	CO2	**10**
		OR			
	b.	Block A weighing 1000N rests over block B which weighs 2000N as shown in the figure. Block A is tied to wall with a horizontal string. If the coefficient of friction between blocks A and B is 0.25 and between B and floor is 1/3, what should be the value of P to move the block B, if **(i)** P is horizontal **(ii)** P acts at 30° upwards to horizontal.	L-4	CO2	**10**

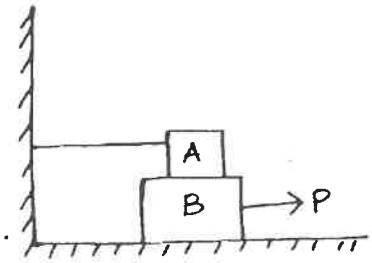

10.	**a.**	Find the centroid of L-section with web dimensions 40mmX200mm and flange dimensions 200mmX50mm.	L-4	CO3	**10**
		OR			
	b.	Find the centroid of the C-section as shown in the figure. Assume units as millimetres. 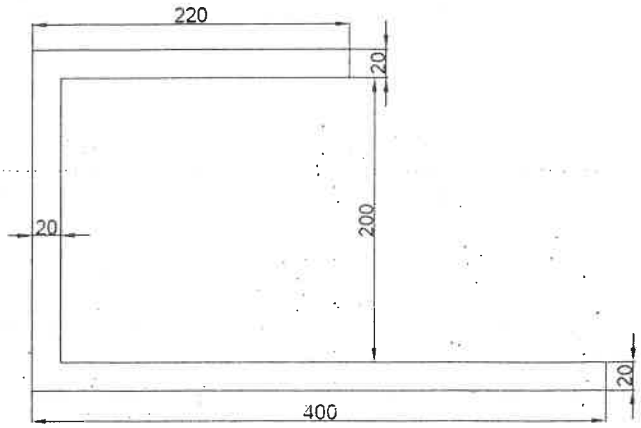	L-4	CO3	**10**
11.	**a.**	Determine the moment of inertia with respect to both X & Y axes for I-section with top flange dimensions of 24mm X 6mm, bottom flange dimensions of 48mm X 6mm and web dimension of 8mm X 48mm.	L-4	CO4	**10**
		OR			
	b.	Find the moment of inertia for the C-section shown in the figure at horizontal centroid axis. 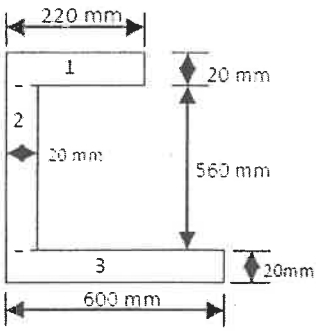	L-4	CO4	**10**
12.	**a.**	The equation of motion of a particle is $S = -6-5t^2 + t^3$ where S is in metres and t in seconds. Calculate **i.** The displacement and the acceleration when the velocity is zero. **ii.** The displacement and the velocity when the acceleration is zero.	L-4	CO5	**10**

		OR			
	b.	A car moves in a straight line such that for a short time its velocity is defined by $v = (3t^2 + 2t)$ m/s, where t is in seconds. Determine its position and acceleration when t = 3 s. (When t = 0, s = o).	L-4	CO5	**10**
13.	**a.**	Determine the moment of inertia for the following T-section. 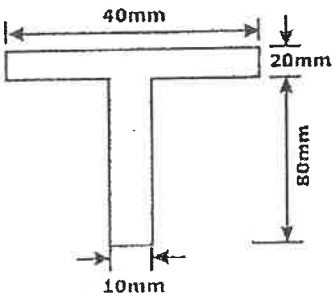	L-4	CO4	**10**
		OR			
	b.	Determine the co-ordinates of centroid with respect to 'O' of the section as shown in the figure. 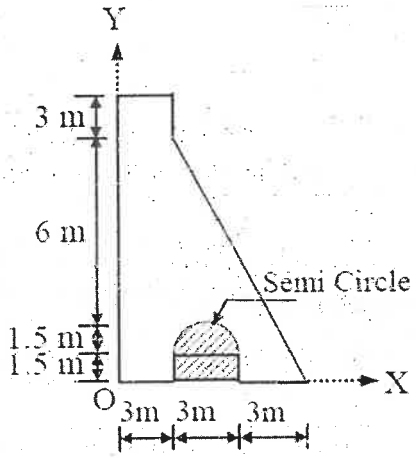	L-4	CO3	**10**